REVISIONS				
ZONE	REV.	DESCRIPTION	DATE	CHECKED
	—	NEW RELEASE	07-19-07	

DRAWING NO. Outline Dwg

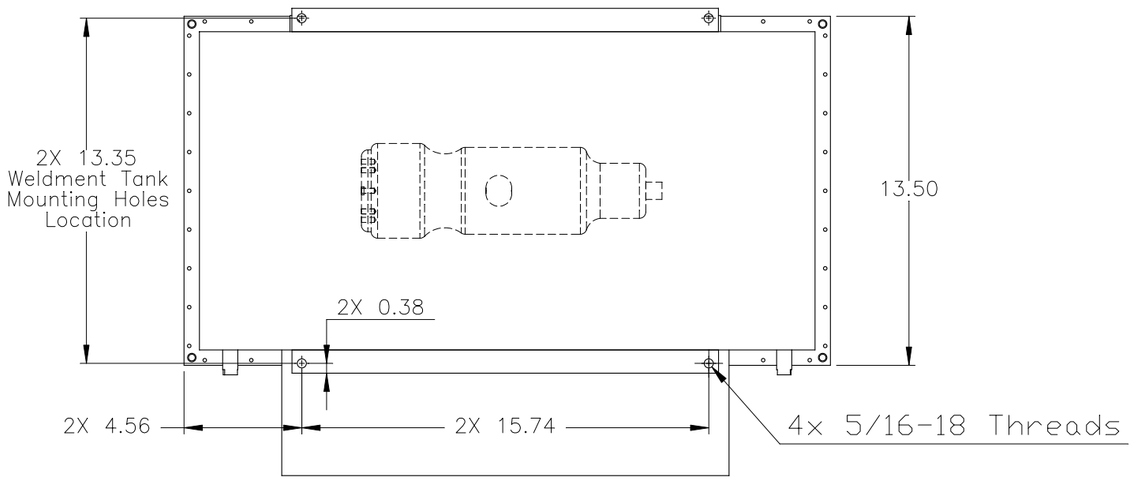

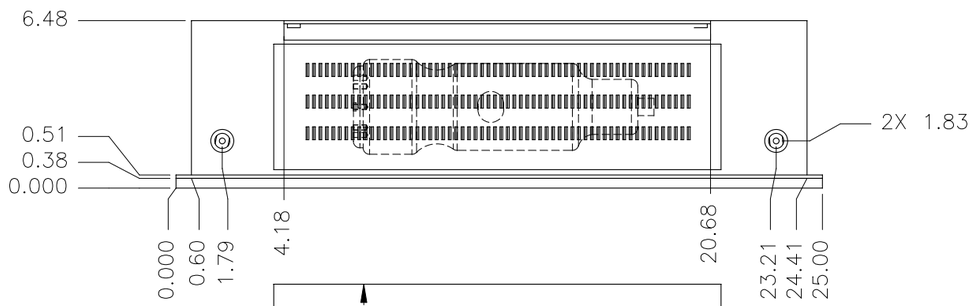

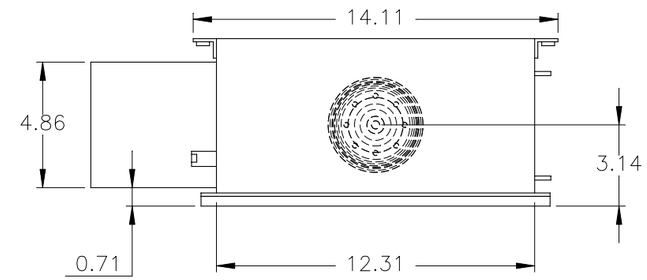

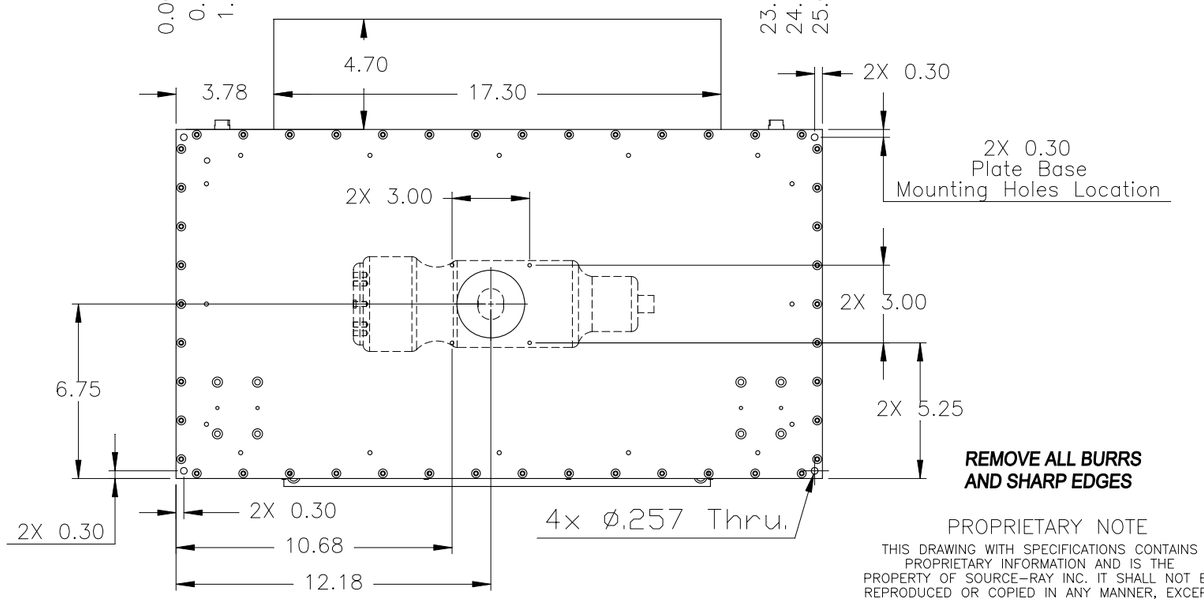

REMOVE ALL BURRS AND SHARP EDGES

PROPRIETARY NOTE

THIS DRAWING WITH SPECIFICATIONS CONTAINS PROPRIETARY INFORMATION AND IS THE PROPERTY OF SOURCE-RAY INC. IT SHALL NOT BE REPRODUCED OR COPIED IN ANY MANNER, EXCEPT UNDER CONTRACT OR AUTHORIZATION FROM SOURCE-RAY.INC

DISCLAIMER:

ALL INFORMATION CONTAINED IN THIS DRAWING IS SUBJECT TO CHANGE WITHOUT NOTICE. SPECIFICATIONS, DIMENSIONS, ETC... WERE DEEMED TO BE ACCURATE AT THE DATE OF PUBLICATION. CONTACT SOURCE-RAY INC. FOR THE LATEST INFORMATION.

UNLESS OTHERWISE SPECIFIED DIMENSIONS ARE IN INCHES TOLERANCES ARE:

FRACTIONS	DECIMALS	ANGLES
± 1/64	.XX ± .01 .XXX ± .005	± 30'

NEXT ASSY	USED ON

MATERIAL:

FINISH:

DRAWN BY: T.T.	DATE 07-19-07
CHECKED BY:	
MECH. ENG:	
ELECT. ENG:	
RELEASED:	

Source-Ray Inc.

167 KEYLAND COURT, BOHEMIA, NEW YORK, 11716-2621

TITLE **Outline Drawing Model :SB-250-3K-IC**

SIZE	DRAWING NO.	REV.
B	Outline Dwg	0

SCALE	NO. REQ'D	DO NOT SCALE DRAWING	SHEET
			1 of 1